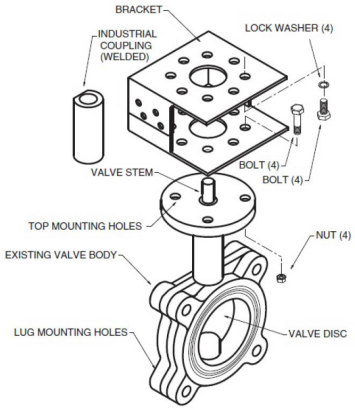

5

5-year warranty

Technical data

Functional data	Fluid Temp Range (water)	Please Refer to Manufacturer's Valve Specifications
	Mounting Position	360°
	Applicable valve size	14" [350]
Materials	Hardware	zinc plated steel
	Spindle	stainless steel
	Frame, plate, base	stainless steel
	Coupling	steel
Suitable actuators	Non-Spring	SY7

For close-off pressure reference Select Pro or retrofit technical documentation.

Product features

Default/Configuration The actuator is sold separately from the linkage. This allows users to select the specified actuator with the desired control signal. Since the linkage utilises standard SY actuators, they can be purchased at any time and mounted in the field.

Application The UFLK retrofit kit is designed to easily attach to the valve mounting pad on select competitor valves utilizing Belimo SY industrial series actuators. This kit will help to restore service without removal of the valve, saving down time. The UFLK retrofit kits are available in various configurations for use with both 2-way and 3-way valves where applicable.

Operation The UFLK and mounted actuator(s) are capable of rotating 90° in both CW and CCW directions. This allows the disc to fully open or close. When directional needs vary, the actuator's directional switch can be flipped to change the rotation. The SY/PR is NEMA 4X rated and can be used outdoors.

Dimensions

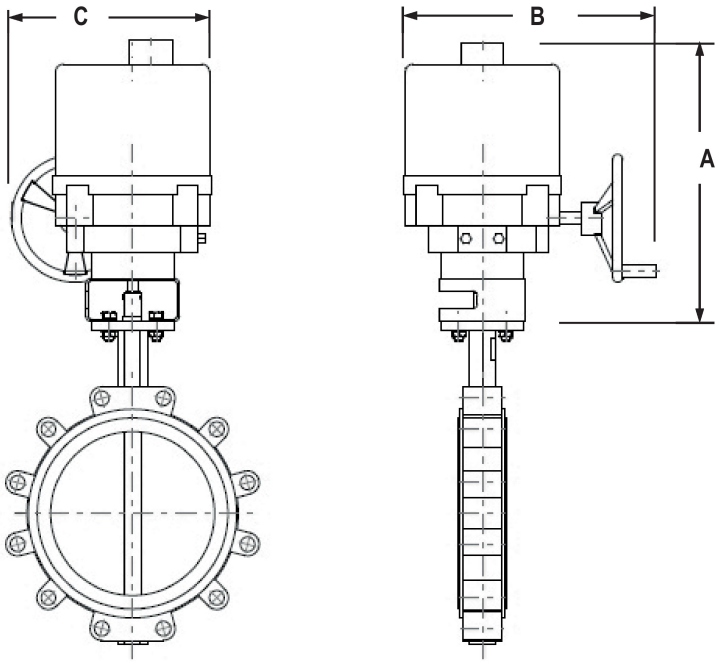

SY

A	B	C
25.2" [640]	17.8" [451]	13.5" [342]